VOCs degradation with non-thermal plasma and Ag-MnOx catalysis

Xiujuan Tang, Meng Wang, Weiqiang Feng, Fada Feng, Keping Yan*

Industrial Ecology and Environment Research Institute, Department of Chemical and Biological Engineering, Zhejiang University, Hangzhou, 310028, P. R. China

Abstract: Non-thermal plasma (NTP) is effective for degradation of aromatic molecules, achieving complete mineralization, however, is difficult. In contrast, thermal catalysis may be very effective toward achieving complete mineralization at high temperatures. Its drawbacks at a low processing temperature are undesirable intermediate byproducts production. By integrating dielectric barrier discharge with home-made Ag-MnOx catalyst, we have succeeded in achieving both VOCs complete decomposition and without toxic byproducts production. As an example, this paper reports toluene decomposition in air. The effects of the reaction temperature and the plasma specific energy density on the decomposition efficiency and byproducts formation are experimentally investigated. Very effective synergetic effect between the NTP and catalyst has been observed for VOCs decomposition.

Keywords: VOCs; nonthermal plasma; ozone; Ag-MnOx catalyst

1. Introduction

VOCs such as alkanes, aromatic or halogenated compounds are hazardous pollutants emitted from paints, solvents, preservatives, automobile exhaust gas, and certain industrial processes. Some VOCs may be carcinogens or may produce respiratory diseases and in addition, cause ozone layer depletion, green house effect. Previous works have demonstrated that nonthermal plasma is quite effective for the decomposition of the VOCs, but it was found that the plasma treatment alone leads to formation of unwanted by-products such as ozone (O_3), NOx, carbon monoxide (CO), and aerosol particles [1, 2]. In order to eliminate this disadvantage, nonthermal plasma (NTP) technology for VOCs removal could take advantage of its synergetic effect by coupling with heterogeneous catalysts.

Instead of working independently, the combination of NTPs and catalysts could induce extra performance enhancement mechanisms either in a single-stage or a two-stage configuration, in which the catalyst is located inside and downstream from the nonthermal plasma reactor, respectively. And NTPs are usually combined with an appropriate catalyst such as $BaTiO_3$, Al_2O_3, TiO_2, MnO_2, and zeolites or their derivatives. Among these choices of catalysts, MnO_2 is found to be the best catalyst because it could effectively decompose ozone and generate active species toward VOC destruction and better energy efficiency [2, 4].

Although some catalysts are capable of decomposing ozone and removing VOCs simultaneously at room temperature, the catalysts would gradually deactivate because of the build-up of organic intermediates. In the present study, a highly active Ag-MnOx ozone decomposition catalyst was introduced into the NTP system in order to avoid such a problem. The synergetic effect was investigated at atmospheric pressure and room temperature for the oxidation of toluene as a model VOC.

2. Experimental

A schematic diagram of the experimental system is shown in Fig. 1. The experimental apparatus consisted of a continuous-flow contaminated gas generation system, a DBD reactor driven by a 50-Hz AC power supply, a fixed-bed catalytic reactor and an electric and gas analysis unit. The initial toluene concentration in the mixed air feed was: 67 ppm. The flow rate and toluene concentration were adjusted by mass flow controllers (MFC-1 and MFC-2), which were fixed at 6 ml/min and 492 ml/min, respectively. The coaxial cylindrical DBD reactor was made of silica tube with an inner diameter of 21 mm and wall thickness of 2 mm wrapped by the copper mesh of 10 cm length as a ground electrode. The inner discharge electrode was a stainless steel rod (17 mm in diameter) placed on the axis of the reactor and connected to the

high-voltage output of the AC power supply with 50 Hz, where the discharge gap is 2 mm. The discharge was limited in the space between the inside surface of the silica tube covered with the copper mesh and the outside surface of the stainless steel rod. The discharge space volume was 11.9 cm^3 and this corresponds to a gas residence time in the DBD reactor was 1.4 s. A post-plasma treatment of the effluent was performed in a catalysis fixed-bed reactor. A newly developed silver-cobalt composite oxides catalyst was used. The catalyst powder was pressed, crushed and sieved to a size of 40–60 mesh for the catalytic evaluation. Catalyst (200 mg) was loaded in the quartz reactor with quartz wool held at both ends of the catalyst bed leading a weight hourly space velocity (WHSV) of about 15,000 h^{-1}. The gas effluent was not heated before the discharge reactor or the catalyst.

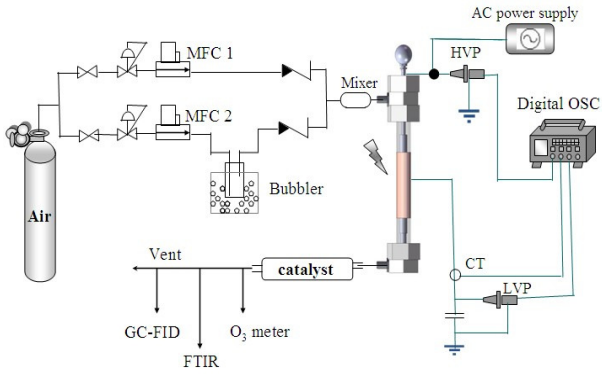

Figure 1. *Schematic diagram of experimental setup*

The high voltage applied to the plasma reactor was measured with a 1000: 1 voltage probe (Tektronix, P6015A). The waveforms of voltage were recorded using a digital oscilloscope (Tektronix, TDS 3052). Discharge current was measured as charge by measuring the voltage across the capacitor connected in series to the ground lines of the plasma reactors with a 10:1 probe (Tektronix, P6109B). The V–Q method was used to determine discharge power in the plasma reactors. The charge Q was determined by measuring the voltage across the capacitor of 100 nF, which was connected sequentially to the ground line of the plasma reactors.

The gas composition was analyzed online using a Fourier transform infra-red absorption spectrometer (FTIR, Bruker Tensor 27), equipped with a 2 m long multiple pass absorption cell. On the other hand, for accurate quantitative gas analysis, an on-line gas chromatograph (Fuli 9790, Wenlin, China) equipped with a polyethylene glycol capillary column (30 m, 0.25 mm), and a flame ionization detector (FID) was used to measure VOCs. The experimental data taken after steady state were averaged and the values were used to evaluate the performance of the plasma-catalytic hybrid system. Ozone was measured by UV-absorption at 254 nm in the late afterglow, the analyzer (ZN-MODEL254) being placed outside the reactors.

3. Results and Discussion

3.1 Decomposition of toluene by non-thermal plasma treatment alone

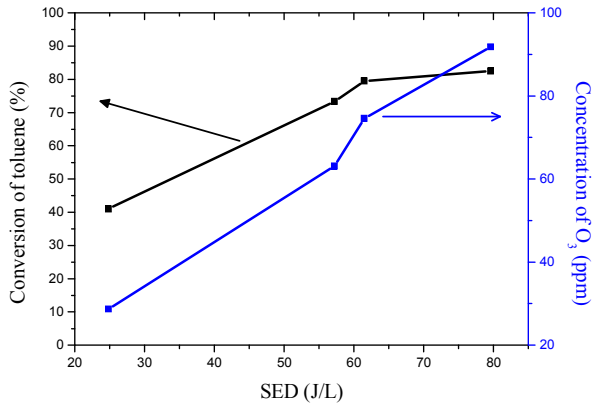

Figure 2. *Toluene decomposition efficiency and ozone concentration variation versus SED.*

An air stream of 500 ml/min containing 67 ppm of toluene was treated in the DBD reactor. The decomposition of C_6H_8 and the formation of ozone in the discharge are shown in Fig. 2. It shows that the conversion of toluene steadily increases when SIE increases. Besides, huge amounts of ozone are produced in the discharge, as can be seen in Fig. 2, O_3 concentration at the outlet of the NTP reactor can reach values as high as nearly 100 ppm at a specific energy of 79.6 J/L. The high outlet ozone concentration for the treatment of volatile organic compounds in air using DBD reactor was often quite expected, because dielectric barrier discharge (DBD) has been widely used for ozone generation. However, oxygen atoms that are consumed in the formation of ozone are not available for the elimination of pollutants in the effluent. Therefore, a significant part

of the energy that has been injected in the discharge to create high energy electrons, which produce radicals by dissociation of molecular oxygen, is wasted in the production of ozone. Moreover, Ozone emissions in the atmosphere are not desirable, as O_3 is responsible for respiratory diseases and is implied in the formation of smog over big cities.

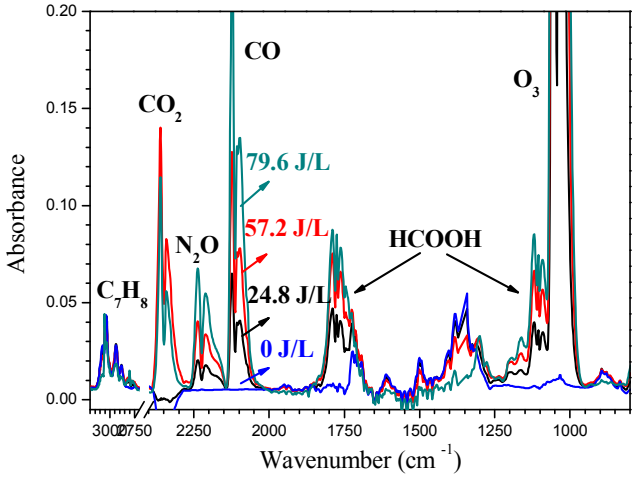

Figure 3. *Evolution of FTIR spectra of the effluent during NTP treatment of toluene at the SED range of 0 to 79.6 J/L.*

Then organic and inorganic by-products have been determined for the studied VOC. FTIR spectra of the effluent treated by NTP and NTP-catalysis are compared in Fig. 3. FTIR analyses show that the toluene is only partially oxidized. Several hazardous organic by-products (such as formaldehyde and formic acid) and inorganic by-products (carbon monoxide N_2O and ozone) remain in the exhaust. No traces of nitrogen oxides [NO and NO_2] were detected among the numerous by-products. The carbon balance that is only 86% at a specific energy of 79.6 J/L may due to the following facts: On one hand, a part of the carbon may be converted into formic acid, as quite strong signals are observed in the bands ranging 1135-1080 cm^{-1}. On the other hand, a layer of light yellow solid matter was found deposited on the inner wall of the reactor after hours of treatment. Therefore, the presence of a catalyst downstream or in the DBD reactor is absolutely necessary to clean the gas.

3.2 Decomposition of toluene by a two-stage non-thermal plasma catalytic treatment

When non-thermal plasma (especially DBD) is produced in an oxygen-rich gas stream, ozone formation is generally inevitable. In previous investigations it has been proposed that the decomposition of ozone on transition metal oxides (Co_3O_4, MnO_2) leads to the formation of atomic oxygen (probably O-) on the oxide surfaces[]. On the other hand, studies on the oxidation of CO and benzene in the presence of ozone have shown this form to be, most probably, the oxidant. Moreover, it has been proved that in terms of the reactivity, an oxygen atom is a more chemically active species than ozone [5]. Hence, it would be favorable for the oxidation reaction if ozone can be decomposed into an oxygen atom before reacting with VOC molecules or CO. In this study, we are focusing on developing a highly active ozone-decomposition catalyst and couple it with DBD in an arrangement of two-stage NTP catalysis.

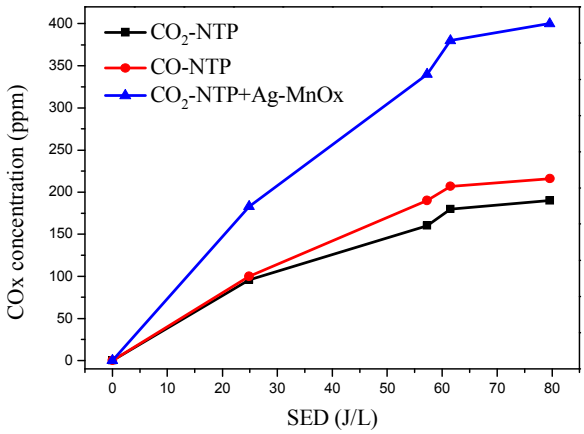

Figure 4. *Eeffect of Ag-MnOx catalyst on the formation of carbon oxides during the abatement of toluene (67 ppm).*

As can be seen in Fig. 4, the concentrations of CO_2 and CO increase with the rise of SED when treatment of toluene by non-thermal plasma treatment alone. This is in good agreement with the rise of toluene conversion. The by-products resulting from toluene decomposition by DBD-catalytic reaction are shown in Fig. 5. Notably, the formation of CO_2 is enhanced by introduction of Ag-MnO_2 as a catalyst downstream, which shows that a further oxidation is obtained. CO is completely removed. The total disappearance of absorption signals of the formaldehyde (HCHO), formic acid (HCOOH), ozone (O_3) and carbon monoxide (CO) that are produced during the degradation of toluene in the dielectric barrier discharge reactor indicates they are completely

and simultaneously removed in the fixed-bed reactor. Unfortunately, N_2O levels are unaffected by the highly active Ag-MnOx ozone-decomposition catalyst.

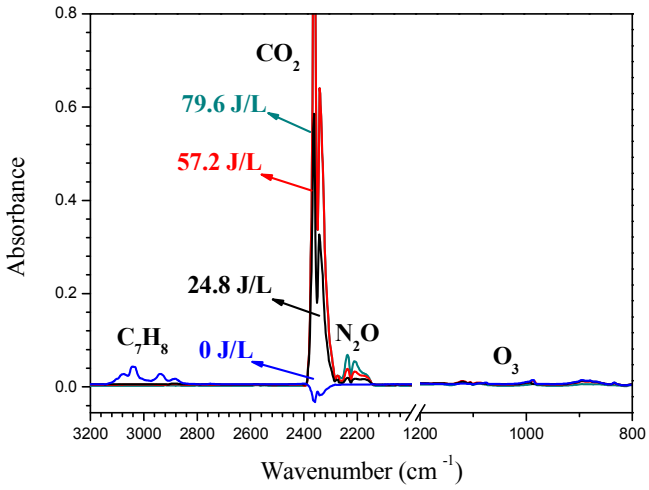

Figure 5. *Comparison of FTIR spectra after NTP- catalytic post-treatment in the SED range of 0 to 79.6 J/L*

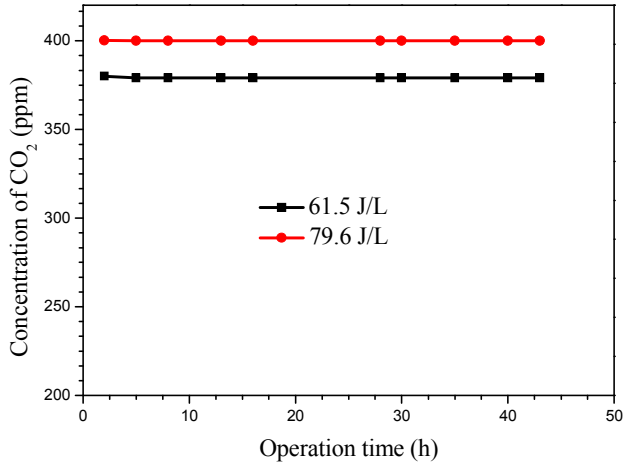

Figure 6. *Concentrations of produced CO_2 versus operation time*

Stability of Reaction System in Nonthermal plasma processing of air containing 67 ppm of toluene assisted by highly active Ag-MnOx ozone decomposition catalysts was studied. The outlet concentration of produced CO_2 was measured as function of operation time (see Fig 6). It is clearly shown that the stability is very satisfied. The catalytic activity of these metal oxides in reaction of ozone decomposition and catalytic oxidation of CO and VOCs with ozone don't decrease with time.

4. Conclusion

In conclusion, toluene can be decomposed by dielectric barrier discharge at room temperature with a low energy cost. However, FTIR analyses show that the toluene is only partially oxidized; a large amount of CO is also produced; several hazardous small molecules organic by-products (formic acid and formaldehyde) remain in the exhaust. Besides, large amounts of O_3 are produced during the discharge treatment. A very important feature of the Ag-MnOx catalyst in two-stage configuration is that it possesses both high activity toward ozone decomposition and oxidation with ozone, which leads to removal of the residual ozone and CO and VOCs from waste gases. The high catalytic activity and stability using ozone produced from the DBD reactor as oxidant toward VOCs and CO removal permits the reaction to be carried out in a low temperature region (at room temperature), which is extremely important for the industrial use, because it permits saving energy.

Acknowledgments

This work was supported financially by the Natural Science Foundation of China (No. 21006092) and China Postdoctoral Science Foundation (No. X90906)

References

[1] F. Holzer, F.D. Kopinke, U. Roland, Plasma Chem. Plasma Process. 25 (2005)595.

[2] M. Magureanu, N.B. Mandache, V.I. Parvulescu, C. Subrahmanyam, A. Renken, L. Kiwi-Minsker, Appl. Catal. B: Environ. 74 (2007) 270.

[3] S. Delagrange, L. Pinard, J.M. Tatibouet, Appl. Catal. B: Environ. 68 (2006) 92.

[4] S.B. Han, T. Oda, Plasma Sources Sci. Technol. 16 (2007) 413.

[5] A. Naydenov, R. Stoyanova, D. Mehandjiev. Journal of Molecular Catalysis A: Chemical 98 (1995) 9.